University of Mumbai

Examination 2020 under cluster-5 (APSIT)

Program: Electronics and Telecommunication Engineering

Curriculum Scheme: Rev-2016

Examination: Third Year Semester V

Course Code: ECC501 and Course Name: Microprocessor and Peripherals

Time: 1 hour Max. Marks: 50

==========

For the students: - All the Questions are compulsory and carry equal marks.

Q1.	A tool that converts program written in assembly language to machine level code is ----------.
Option A:	Assembler
Option B:	Converter
Option C:	Complier
Option D:	Interpreter
Q2.	The ------- bus transmits the signals such as read, write etc.
Option A:	Address Bus
Option B:	Data Bus
Option C:	Control Bus
Option D:	Ordinary Bus
Q3.	Which memory is located close to the CPU on the computer motherboard?
Option A:	Secondary Memory
Option B:	Primary Memory
Option C:	Virtual Memory
Option D:	Program Memory
Q4.	What is the size of Data Bus of 8086 microprocessor?
Option A:	8
Option B:	32
Option C:	16
Option D:	64
Q5.	8086 microprocessor can access up to -------- byte of memory.
Option A:	1MB
Option B:	256KB
Option C:	2MB
Option D:	64KB
Q6.	8086 microprocessor has -------- operating modes.
Option A:	1
Option B:	4
Option C:	3
Option D:	2
Q7.	In 8086 microprocessor, maximum size of each segment is --------.
Option A:	8KB
Option B:	16KB

Option C:	32KB
Option D:	64KB
Q8.	Which of the following is not a data copy/transfer instruction?
Option A:	MOV
Option B:	PUSH
Option C:	DAS
Option D:	POP
Q9.	The instructions that involve various string manipulation operations are --------
Option A:	branch instructions
Option B:	flag manipulation instructions
Option C:	shift and rotate instructions
Option D:	string instructions
Q10.	Which of the following is assembler directive?
Option A:	SEGMENT
Option B:	MUL
Option C:	DIV
Option D:	ADD
Q11.	Directive DW defines variable of:
Option A:	1 byte
Option B:	2 bytes
Option C:	3 bytes
Option D:	4 bytes
Q12.	DIV CL instruction stores quotient at --------.
Option A:	AL
Option B:	AH
Option C:	CL
Option D:	CH
Q13.	How many maximum number of slaves can be connected in cascading of IC 8259?
Option A:	8
Option B:	12
Option C:	14
Option D:	16
Q14.	The number of counters that are present in the programmable interval timer 8254 is ------- .
Option A:	1
Option B:	2
Option C:	3
Option D:	4
Q15.	-------- number of 8 bit Ports are available in IC 8255.
Option A:	1

Option B:	2
Option C:	3
Option D:	4
Q16.	The pin of DMA controller that requests the access of the system bus is --------.
Option A:	HRQ
Option B:	HLDA
Option C:	ADSTB
Option D:	IRQ
Q17.	IC 8257 is ……
Option A:	Programmable Peripheral Interface
Option B:	DMA Controller
Option C:	Bus Controller
Option D:	Clock generator
Q18.	What is the function of SOC signal in ADC 0809/0808 IC?
Option A:	It initiates the Start of Conversion from analog to digital signal
Option B:	It initiates the Start of Clock pulse for ADC
Option C:	It stands for Successive output conversion
Option D:	It stands for Serial output conversion
Q19.	How the analog input is selected for conversion?
Option A:	Randomly
Option B:	with the help of select lines
Option C:	In ascending order
Option D:	In descending order
Q20.	How many equal intervals are present in a 14-bit D-A converter?
Option A:	16384
Option B:	4096
Option C:	65536
Option D:	1024
Q21.	In ADC, the ALE is used to --------.
Option A:	Start conversion
Option B:	Stop conversion
Option C:	Provide clock
Option D:	Latch Channel number
Q22.	If a memory chip has address lines of A0- A12, how much shall be capacity of memory?
Option A:	1k
Option B:	2k
Option C:	4k
Option D:	8k
Q23.	BUSY signal of 8087 is connected with -------- pin of 8086.

Option A:	TEST
Option B:	HOLD
Option C:	INTR
Option D:	QS0
Q24.	Which of the following data lines are used by 8086 to read / write a byte from EVEN addressed memory locations?
Option A:	AD0-AD7
Option B:	AD8-AD15
Option C:	AD0- AD15
Option D:	AD0-AD11
Q25.	How many address lines a memory chip of 4K capacity will have?
Option A:	11
Option B:	12
Option C:	13
Option D:	14

University of Mumbai

Examination 2020 under cluster-5 (APSIT)

Program: Electronics and Telecommunication Engineering

Curriculum Scheme: Rev-2016

Examination: Third Year Semester V

Course Code: ECC501 and Course Name: Microprocessor and Peripherals

Time: 1 hour Max. Marks: 50

==========

Question Number	Correct Option
Q1.	A
Q2.	C
Q3.	B
Q4	C
Q5	A
Q6	D
Q7	D
Q8.	C
Q9.	D
Q10.	A
Q11.	B
Q12.	A
Q13.	A
Q14.	C
Q15.	C
Q16.	A
Q17.	B
Q18.	A
Q19.	B
Q20.	A
Q21.	D
Q22.	D
Q23.	A
Q24.	A
Q25.	B

Program: BE EXTC Engineering

Curriculum Scheme: Revised 2016

Examination: Third Year Semester VI

Course Code: ECCDLO6021 and Course Name: Digital VLSI Design

Time: 1 hour Max. Marks: 50

==========

Note to the students:- All the Questions are compulsory and carry equal marks .

Q1.	In CMOS logic circuit the n-MOS transistor acts as:
Option A:	Load
Option B:	Pull up network
Option C:	Pull down network
Option D:	Not used in CMOS circuits
Q2.	In CMOS inverter if VDD and VSS is swapped then circuit is called as
Option A:	Weak Buffer
Option B:	Inverter
Option C:	Invalid circuit
Option D:	Buffer
Q3.	In CMOS logic circuit, the switching operation occurs because:
Option A:	Both n-MOSFET and p-MOSFET turns OFF simultaneously for input ‘0’ and turns ON simultaneously for input ‘1’
Option B:	Both n-MOSFET and p-MOSFET turns ON simultaneously for input ‘0’ and turns OFF simultaneously for input ‘1’
Option C:	N-MOSFET transistor turns ON, and p-MOSFET transistor turns OFF for input ‘0’ and N-MOS transistor turns OFF, and p-MOS transistor turns ON for input ‘1’
Option D:	N-MOSFET transistor turns ON, and p-MOSFET transistor turns OFF for input ‘1’ and N-MOS transistor turns OFF, and p-MOS transistor turns ON for input ‘0’
Q4.	What is the logic equation of the given circuit?

	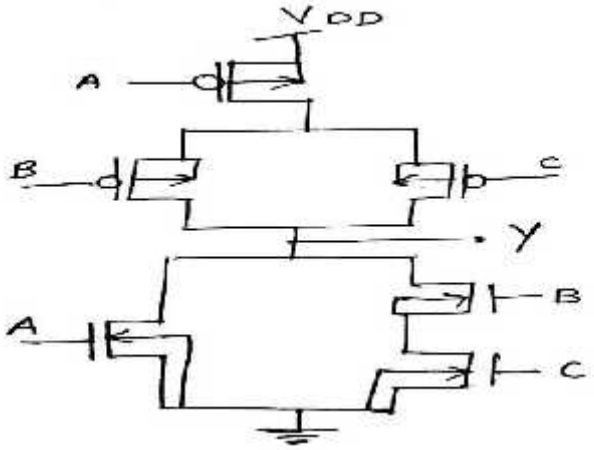
Option A:	$Y = A + B(C + D)$
Option B:	$Y = A + BC$
Option C:	$Y = A(B + C) + D$
Option D:	$Y = AB + C$
Q5.	Which of the following design style is a solution to the erroneous state problem of Dynamic logic design style?
Option A:	Pseudo NMOS logic
Option B:	Static CMOS logic
Option C:	Domino logic
Option D:	Pass transistor logic
Q6.	Which of the following techniques do not require a clock.
Option A:	C^2MOS
Option B:	Domino
Option C:	NORA
Option D:	Static CMOS
Q7.	Why is SRAM more preferably used in non-volatile memory?
Option A:	low-cost
Option B:	high-cost
Option C:	low power consumption
Option D:	transistor as a storage element
Q8.	In a NOR based ROM array logic the absence of an active transistor at cross point of row and column indicates
Option A:	Logic ‘0’
Option B:	Logic ‘1’
Option C:	Ambiguity
Option D:	Open circuit
Q9.	In flash memory we use
Option A:	Single gate MOSFET
Option B:	Dual gate MOSFET

Option C:	No Gate terminal MOSFET.
Option D:	BJT
Q10.	Row decoder is used to
Option A:	Reduce the number of address bits
Option B:	Increase the number of address bits
Option C:	Reduce the number of bits
Option D:	Increase the number of words.
Q11.	Carry save Adder is suitable for
Option A:	one input
Option B:	two input
Option C:	multiple inputs
Option D:	no inputs
Q12.	Identify following circuit 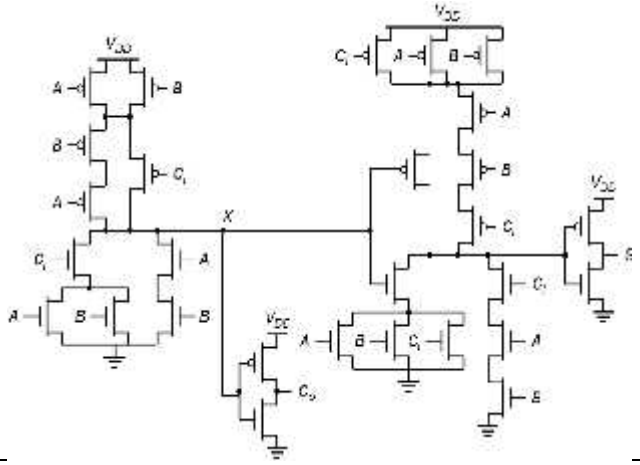
Option A:	Mirror adder
Option B:	Carry look ahead adder
Option C:	Half adder
Option D:	Full adder
Q13.	Suppose that we are adding 15, 32-bit numbers using 32-bit carry save adder modules and a parallel adder in the last stage of the computation. The minimum number of carry save adders required will be
Option A:	15
Option B:	18
Option C:	16
Option D:	13
Q14.	The expression for generate term G in CLA adder is
Option A:	$\overline{A.B}$
Option B:	A+B
Option C:	AB
Option D:	$\overline{A+B}$

Q15.	In reality clock signals have
Option A:	Zero skew
Option B:	Non-zero skew
Option C:	Zero fall time
Option D:	Zero rise time
Q16.	In digital VLSI to stabilize clock we use
Option A:	PLL
Option B:	Oscillator
Option C:	Decoder
Option D:	Encoder
Q17.	In case of two phase clocking , how much degree phase shift is there in two clock signals ?
Option A:	0
Option B:	45
Option C:	180
Option D:	90
Q18.	FPGA Based design has turn around time_____ than ASIC based design.
Option A:	Less
Option B:	More
Option C:	Equal
Option D:	More or less
Q19.	Which one of the following is not FPGA Programming technologies
Option A:	Antifuse.
Option B:	SRAM
Option C:	EPROM
Option D:	UART
Q20.	Which one of the following is the fundamental architecture block or element of a target PLD.
Option A:	System Partitioning
Option B:	Pre-layout Simulation
Option C:	Logic cell
Option D:	Post-layout Simulation
Q21.	Which design is faster?
Option A:	full custom design
Option B:	semi-custom design
Option C:	gate array design
Option D:	transistor design

Q22.	Which of the following statement is true for FSM? 1) Only Boolean I/P's (one bit) 2) No track of Total data value like addition, subtraction etc. 3) Storage 4) Can perform addition, subtraction etc
Option A:	1, 2, 3
Option B:	1, 2
Option C:	1, 4
Option D:	3, 4
Q23.	In HLSM "==" indicates
Option A:	Equality
Option B:	Comparison
Option C:	Assignment
Option D:	Conditional assignment
Q24.	In state diagram what does the arrow between two circle indicates
Option A:	Present state
Option B:	Next state
Option C:	State transition
Option D:	Dont care condition
Q25.	Which of the following is not part of FPGA
Option A:	RTL
Option B:	I/O
Option C:	PI
Option D:	CLB

Program: BE EXTC Engineering

Curriculum Scheme: Revised 2016

Examination: Third Year Semester VI

Course Code: ECCDLO6021 and Course Name: Digital VLSI Design

Time: 1 hour Max. Marks: 50

==========

Question	Correct Option (Enter either 'A' or 'B' or 'C' or 'D')
Q1.	C
Q2.	A
Q3.	D
Q4	B
Q5	C
Q6	D
Q7	C
Q8.	B
Q9.	B
Q10.	A
Q11.	C
Q12.	D
Q13.	D
Q14.	C
Q15.	B
Q16.	A
Q17.	C

Q18.	A
Q19.	D
Q20.	C
Q21.	C
Q22.	B
Q23.	B
Q24.	C
Q25.	A

University of Mumbai
Examination 2020

Program: Electronics and Telecommunication Engineering
Curriculum Scheme: Rev2016
Examination: Third Year Semester V
Course Code: ECC502 and Course Name: Digital Communication
Time: 1 hour Max. Marks: 50

==========

==========

For the students:- All the Questions are compulsory and carry equal marks .

Q1.	What does the central limit theorem state?
Option A:	if the sample size increases sampling distribution must approach normal distribution
Option B:	if the sample size decreases then the sample distribution must approach normal distribution
Option C:	if the sample size increases then the sampling distribution much approach an exponential distribution
Option D:	if the sample size decreases then the sampling distribution much approach an exponential distribution
Q2.	In a communication system, a process in which statistical averages and time averages are equal is called as
Option A:	Stationary
Option B:	Ergodic
Option C:	Gaussian
Option D:	Poisson
Q3.	If the values taken by a random variable are negative, the negative values will have
Option A:	Positive probability
Option B:	Negative Probability
Option C:	May have negative or positive probabilities
Option D:	Insufficient data
Q4.	The expected value of a random variable is its
Option A:	Mean
Option B:	Standard Deviation
Option C:	Mean Deviation
Option D:	Variance
Q5.	The value of the probability density function of random variable is___
Option A:	Positive function
Option B:	Negative function
Option C:	Zero
Option D:	One
Q6.	Conditional Entropy is given by:
Option A:	H(X/Y)
Option B:	H(Y/X)
Option C:	both A & B

Option D:	H(X,Y)
Q7.	when Information increases then
Option A:	Probability also increases
Option B:	Probability has no relation with information
Option C:	Probability remains constant
Option D:	Probability decreases
Q8.	Following is the channel coding method
Option A:	Shannon Fano coding
Option B:	Huffman code
Option C:	both a & b
Option D:	Convolution Code
Q9.	A cyclic code can be generated using
Option A:	Generator polynomial
Option B:	Tree diagram
Option C:	Trellis diagram
Option D:	Coefficient matrix
Q10.	Block codes are generated using
Option A:	Generator polynomial
Option B:	Generator matrix
Option C:	Generator polynomial & matrix
Option D:	Coefficient matrix
Q11.	The feedback shift register circuit is called as
Option A:	Multiplying circuit
Option B:	Dividing circuit
Option C:	Feedback circuit
Option D:	Shifting circuit
Q12.	Which distance is related to the error detection and correction capability of the code?
Option A:	Maximum distance
Option B:	Hamming distance
Option C:	Maximum & Minimum distance
Option D:	Minimum
Q13.	The no. of parity bits for block codes (n, k) are
Option A:	k-n
Option B:	n-k
Option C:	2n-k
Option D:	n-2k
Q14.	Which among the following is not example of block code
Option A:	Turbo code
Option B:	BCH code

Option C:	R-S Code
Option D:	Hamming code
Q15.	In O-QPSK phase shift is
Option A:	180
Option B:	45
Option C:	120
Option D:	90
Q16.	Minimum shift keying is similar to
Option A:	Continuous PSK
Option B:	BPSK
Option C:	BFSK
Option D:	QPSK
Q17.	The spectral efficiency of FSK is
Option A:	1 bits/sec/Hz
Option B:	0.5 bits/sec/Hz
Option C:	0.25 bits/sec/Hz
Option D:	2 bits/sec/Hz
Q18.	QAM Is a combination of
Option A:	PSK and FSK
Option B:	ASK and FSK
Option C:	ASK and PSK
Option D:	MSK and FSK
Q19.	Which technique can be used for bandwidth reduction?
Option A:	BPSK
Option B:	QPSK
Option C:	M-aryFSK
Option D:	BFSK
Q20.	Zero forced equalizers are used for
Option A:	Reducing ISI to zero
Option B:	Sampling
Option C:	Quantization
Option D:	Modulation
Q21.	The criterion used for pulse shaping to avoid ISI is
Option A:	Nyquist criterion
Option B:	Quantization
Option C:	Sample and hold
Option D:	PLL
Q22.	For a noise to be white Gaussian noise, the optimum filter is known as
Option A:	Low pass filter
Option B:	Base band filter

Option C:	Matched filter
Option D:	Bessel filter
Q23.	If input noise is white then probability of error in matched filter is
Option A:	Minimum
Option B:	Maximum
Option C:	Zero
Option D:	Infinity
Q24.	Output Signal to Noise Ratio provided by Matched Filter is
Option A:	Minimum
Option B:	Maximum
Option C:	Zero
Option D:	Infinity
Q25.	Matched filter may be optimally used only for
Option A:	Gaussian noise
Option B:	Transit time noise
Option C:	Flicker noise
Option D:	Thermal Noise

University of Mumbai
Examination 2020

Program: Electronics and Telecommunication Engineering
Curriculum Scheme: Rev2016
Examination: Third Year Semester V
Course Code: ECC502 and Course Name: Digital Communication
Time: 1 hour Max. Marks: 50

==========

Question Number	Correct Option
Q1.	A
Q2.	B
Q3.	A
Q4	A
Q5	A
Q6	C
Q7	D
Q8.	D
Q9.	A
Q10.	B
Q11.	B
Q12.	B
Q13.	B
Q14.	A
Q15.	D
Q16.	A
Q17.	C
Q18.	C
Q19.	B
Q20.	A
Q21.	A
Q22.	C
Q23.	A
Q24.	B
Q25.	A

Department : Electronics & Telecommunication

Syllabus: CBCGS

Semester: V

Subject Name: Digital Communication

Subject Code: ECC502

Date of Exam: 4-12-20

The revised question is as below

Q6.	Conditional Entropy is given by:
Option A:	H(X/Y)
Option B:	H(Y/X)
Option C:	H(X/Y) and H(Y/X)
Option D:	H(X,Y)
Ans	c
Q8.	Following is the channel coding method
Option A:	Shannon Fano coding
Option B:	Huffman code
Option C:	Shannon Hartley Source code
Option D:	Convolution Code
Ans	d

Program: BE Electronics and Telecommunication Engineering

Curriculum Scheme: Revised 2016

Examination: Third Year Semester V

Course Code: ECC503 and Course Name: Electromagnetic Engineering

Time: 1hour Max. Marks: 50

==========

==========

Note to the students:- All the Questions are compulsory and carry equal marks .

Q1.	For a charge Q1, the effect of charge Q2 on Q1 will be,
Option A:	F1 = F2
Option B:	F1 = -F2
Option C:	F1 = F2 = 0
Option D:	F1 and F2 are not equal
Q2.	▫ .J=0 is known as
Option A:	Laplace's Equation
Option B:	Poisson's Equation
Option C:	Continuity equation for steady current
Option D:	Gauss Law
Q3.	Gauss law for magnetic field is given by
Option A:	Div(E) = 0
Option B:	Div(B) = 0
Option C:	Div(H) = 0
Option D:	Div(D) = 0
Q4.	The ratio of magnitudes of electric field intensity to the magnetic field intensity is regarded as:
Option A:	Intrinsic impedance
Option B:	Characteristic impedance
Option C:	Transfer admittance
Option D:	Voltage
Q5.	Standing waves occurs due to
Option A:	Impedance match
Option B:	Impedance mismatch
Option C:	Reflection
Option D:	Transmission
Q6.	Find the work done moving a charge 2C having potential V = 24volts is
Option A:	96 J
Option B:	24 J

Option C:	36 J
Option D:	48 J
Q7.	The lines having R, L, C distributed along the circuit are called
Option A:	Lumped
Option B:	Distributed
Option C:	Parallel
Option D:	Paired
Q8.	The units of capacitance are:
Option A:	Volts/Coulomb
Option B:	Coulomb/Volts
Option C:	Ohms
Option D:	Henry/Wb
Q9.	The electric field intensity is defined as
Option A:	Force per charge
Option B:	Force on a test charge
Option C:	Force per unit charge on a test charge
Option D:	Product of force and charge
Q10.	In a dielectric-conductor boundary , the tangential component of electric field is
Option A:	Et
Option B:	2 Et
Option C:	0
Option D:	1
Q11.	Ampere law states that
Option A:	Divergence of H is same as the flux
Option B:	Curl of D is same as the current
Option C:	Divergence of E is zero
Option D:	Curl of H is same as the current density
Q12.	In electric fields, D= ε E. The correct expression which is analogous in magnetic fields will be
Option A:	H = μ B
Option B:	B = μ H
Option C:	A = μ B
Option D:	H = μ A
Q13.	Which among the following is not the type of RF transmission Lines?
Option A:	Coaxial line
Option B:	Microstrip line
Option C:	Coplanar line
Option D:	Capacitor
Q14.	Conduction in metals is due to
Option A:	Electrons only

Option B:	Electrons and holes
Option C:	Holes only
Option D:	Applied electric field
Q15.	Choose the best definition of a dipole.
Option A:	A pair of equal and like charges located at the origin
Option B:	A pair of unequal and like charges located at the origin
Option C:	A pair of equal and unlike charges separated by a small distance
Option D:	A pair of unequal and unlike charges separated by a small distance
Q16.	In electromagnetic waves, the electric field will be perpendicular to which of the following?
Option A:	Magnetic field
Option B:	Wave propagation
Option C:	Magnetic field and wave direction
Option D:	It propagates independently
Q17.	Ampere's Circuital law is applicable for
Option A:	Open path only
Option B:	Closed path only
Option C:	Either open or close path
Option D:	Square path only
Q18.	Moving towards the clockwise direction in the Smith chart implies moving
Option A:	Towards generator
Option B:	Towards load
Option C:	Towards stub
Option D:	Towards waveguide
Q19.	The use of upward magnetic forces to balance the pervasive downward force of gravity, is a concept used in
Option A:	Super lens
Option B:	Magnetic Levitation
Option C:	RFID
Option D:	Metamaterials
Q20.	Gauss law can be evaluated in which coordinate system?
Option A:	Cartesian
Option B:	Cylinder
Option C:	Spherical
Option D:	Depends on the Gaussian surface
Q21.	A uniform plane wave is one in which
Option A:	E and H are parallel
Option B:	E and H are not present
Option C:	E and H are perpendicular
Option D:	E and H lie in a plane and are perpendicular to each other

Q22.	For a dielectric, the condition to be satisfied is
Option A:	$\sigma/\omega\varepsilon > 1$
Option B:	$\sigma/\omega\varepsilon < 1$
Option C:	$\sigma = \omega\varepsilon$
Option D:	$\omega\varepsilon = 1$
Q23.	Relative permeability of vacuum is
Option A:	1
Option B:	1 H/m
Option C:	1 A/m
Option D:	0
Q24.	If magnetic flux of 4 micro Wb passes through an area of 5*10^-4 m2, the flux density is
Option A:	8 mT
Option B:	80 mT
Option C:	0.8 mT
Option D:	0.08 mT
Q25.	The direction of magnetic lines of force is
Option A:	from south pole to north pole
Option B:	from north pole to south pole
Option C:	from one end of the magnet to another
Option D:	from north pole to north pole

Program: BE Electronics and Telecommunication Engineering

Curriculum Scheme: Revised 2016

Examination: Third Year Semester V

Course Code: ECC503 and Course Name: Electromagnetic Engineering

Time: 1hour Max. Marks: 50

==========

==========

Question	Correct Option
Q1.	B
Q2.	C
Q3.	B
Q4	A
Q5	B
Q6	D
Q7	B
Q8.	B
Q9.	C
Q10.	C
Q11.	D
Q12.	B
Q13.	D
Q14.	A
Q15.	C
Q16.	C
Q17.	B
Q18.	A

Q19.	B
Q20.	D
Q21.	D
Q22.	B
Q23.	A
Q24.	A
Q25.	B

University of Mumbai
Examination 2020

Program: Electronics and Telecommunication Engineering
Curriculum Scheme: Rev 2016
Examination: Third Year Semester V
Course Code: ECC-504 and Course Name: Discrete Time Signal Processing
Time: 1 hour Max. Marks: 50

==========

For the students:- All the Questions are compulsory and carry equal marks .

Q1.	FIR filters are
Option A:	Recursive filters
Option B:	Non recursive filters
Option C:	Have feedback
Option D:	Analog filters
Q2.	What is relation between analog and digital frequency in Bilinear Transformation Method
Option A:	$\Omega=\frac{2}{T}\tan\frac{\omega}{2}$
Option B:	$\Omega=T\tan\frac{\omega}{2}$
Option C:	$\Omega=\frac{2}{T}\tan\omega$
Option D:	$\Omega=T\tan\omega$
Q3.	In two's complement representation, with B=3 bit (including sign bit), -0.75 is represented as
Option A:	0.01
Option B:	1.10
Option C:	1.11
Option D:	1.01
Q4.	The architecture that employs instruction level parallelism is
Option A:	Von-Neumann architecture
Option B:	Harvard architecture
Option C:	Modified Harvard architecture
Option D:	VLIW architecture
Q5.	Determine the number of bits required to compute the DFT of a 1024 point sequence with a SQNR of 36dB.
Option A:	16 bits
Option B:	32 bits
Option C:	8 bits
Option D:	12 bits
Q6.	Using Impulse Invariant Technique analog system transfer function $H(s)=\frac{10}{s+7}$ is transformed to digital system transfer function as
Option A:	$H(z)=\frac{10}{1-e^{-7T}z^{-1}}$
Option B:	$H(z)=\frac{-10}{1+e^{-7T}z^{-1}}$

Option C:	$H(z) = \frac{10}{1+\epsilon^{-7T}z^{-1}}$
Option D:	$H(z) = \frac{7}{1-\epsilon^{-10T}z^{-1}}$
Q7.	Symmetry Property is applicable only when
Option A:	x[n] is imaginary value sequence
Option B:	x[n] is both real and imaginary value sequence
Option C:	x[n] is real valued sequence
Option D:	x[n] is greater than zero.
Q8.	Calculate order of filter of a Butterworth low pass filter for Passband gain= 0.9 Stopband gain= 0.2 Pass band frequency Ω_p= 2 rad/sec Stopband frequency Ω_s = 4.828 rad/sec
Option A:	1
Option B:	2
Option C:	3
Option D:	4
Q9.	The no. of complex multiplications for computing DIF-FFT algorithm are
Option A:	(N/2) $\log_2$ N.
Option B:	(N/4) $\log_4$ N.
Option C:	(N/8) $\log_8$ N
Option D:	(N/16) $\log_{16}$ N
Q10.	One of the zeros of Type II FIR filter lies at z= 0.5. The order of the filter is
Option A:	1
Option B:	2
Option C:	3
Option D:	4
Q11.	State whether $H[z] = 1 - z^{-1} - 6z^{-2}$ behaves like a
Option A:	Minimum phase FIR filter
Option B:	Maximum phase FIR filter
Option C:	Mixed Phase FIR filter
Option D:	IIR filter
Q12.	In bilinear transformation the mapping from s-plane to z-plane is accomplished when "s" is replaced by
Option A:	$\frac{2(z+1)}{T(z-1)}$
Option B:	$\frac{2(z-1)}{T(z+1)}$
Option C:	$\frac{2(z+1)}{(z-1)}$
Option D:	$\frac{(z+1)}{T(z-1)}$

Q13.	Many to one mapping occurs in
Option A:	Bilinear Transformation method
Option B:	Chebyshev Method
Option C:	Butterworth technique
Option D:	Impulse Invariant Technique
Q14.	Linear convolution result is same as circular convolution if
Option A:	N>=L+M-1
Option B:	N<=L+M-1
Option C:	N<=L+M
Option D:	N>=L+M
Q15.	Type III Linear phase FIR filter can behave like an_____ and Type IV like an _____
Option A:	Low pass filter, High pass filter
Option B:	High pass filter, Low pass filter
Option C:	Band pass Filter, High Pass filter
Option D:	High pass filter, Band pass filter
Q16.	The window which has the narrowest main lobe for an order N is
Option A:	Hamming
Option B:	Hanning
Option C:	Blackmann
Option D:	Rectangular
Q17.	The first five points of the eight point DFT of a real valued sequence are {0.25, 0.125-j0.3018, 0, 0.125-j0.0518, 0}. determine the remaining three points
Option A:	0.125-j0.0518,0,0.125-j0.3018
Option B:	0.25-j0.518,0,0.25-j0.3018
Option C:	0.125+j0.3018,0,0.125+j0.0518
Option D:	0.125+j0.0518,0,0.125+j0.3018
Q18.	In 8-point DFT by radix-2 FFT,there are _____ stages of Computations with _____ butterflies per stage
Option A:	three,three
Option B:	four,four
Option C:	three,four
Option D:	four,three
Q19.	In the DTMF signal tone number 1 press generates _____ and _____ tones
Option A:	697 Hz and 1209 Hz
Option B:	770 Hz and 1336 Hz
Option C:	852 Hz and 1336 Hz
Option D:	941 Hz and 1209 Hz
Q20.	In bilinear transformation, the right-half s-plane is mapped to which of the following in the z-domain?
Option A:	Partially outside the unit circle |z|=1

Option B:	Entirely outside the unit circle |z|=1
Option C:	Entirely inside the unit circle |z|=1
Option D:	Partially inside the unit circle |z|=1
Q21.	In ECG signal the heart rate is computed using _____ interval
Option A:	R-R interval
Option B:	S-S interval
Option C:	T-T interval
Option D:	Q-Q interval
Q22.	For a mixed phase system - Net phase change $\|\theta(\pi) - \theta(0)\|$ =
Option A:	π
Option B:	Between 0 and π
Option C:	0
Option D:	Neither 0 nor π
Q23.	The simultaneous fetch of code as data is done in _____ architecture
Option A:	Harvard architecture
Option B:	Von-Neumann architecture
Option C:	Very large instruction word architecture
Option D:	Modified Harvard architecture
Q24.	Symmetry Property is applicable only when
Option A:	x[n] is imaginary value sequence
Option B:	x[n] is both real and imaginary value sequence
Option C:	x[n] is real valued sequence
Option D:	x[n] is greater than zero.
Q25.	DFT is applied to
Option A:	Infinite sequences
Option B:	Finite discrete sequences
Option C:	Continuous infinite signals
Option D:	Continuous finite sequences

University of Mumbai
Examination 2020

Program: Electronics and Telecommunication Engineering
Curriculum Scheme: Rev2016
Examination: Third Year Semester V
Course Code: ECC-504 and Course Name: Discrete Time Signal Processing
Time: 1 hour Max. Marks: 50

==========

Question Number	Correct Option (Enter either 'A' or 'B' or 'C' or 'D')
Q1.	B
Q2.	A
Q3.	D
Q4	D
Q5	A
Q6	A
Q7	C
Q8.	C
Q9.	A
Q10.	C
Q11.	B
Q12.	B
Q13.	D
Q14.	A
Q15.	C
Q16.	D
Q17.	D
Q18.	C
Q19.	A
Q20.	B
Q21.	A
Q22.	B
Q23.	C
Q24.	C
Q25.	B

epartment: Electronics and Telecommunication Engineering

Syllabus: R2016

Semester: V

Subject Name: Discrete Time Signal Processing

Subject Code: ECC 504

Date of Exam: 9-12-2020

The revised question is as below

(Note: the question and the correct answer both has to be mentioned)

Repeated Question:

Q24.	**Symmetry Property is applicable only when**
Option A:	**x[n] is imaginary value sequence**
Option B:	**x[n] is both real and imaginary value sequence**
Option C:	**x[n] is real valued sequence**
Option D:	**x[n] is greater than zero.**

Corrected Question:

Q24.	**Complex conjugate Property is applicable only when**
Option A:	**x[n] is imaginary value sequence**
Option B:	**x[n] is only real and imaginary value sequence**
Option C:	**x[n] is only real valued sequence**
Option D:	**x[n] is greater than zero.**

University of Mumbai
Examination 2020

Program: Electronics and Telecommunication Engineering
Curriculum Scheme: Rev 2016
Examination: Third Year Semester V
Course Code: ECCDLO5011 and Course Name: MICROELECTRONICS.
Time: 1 hour Max. Marks: 50

==========

For the students:- All the Questions are compulsory and carry equal marks .

Q1.	MOSFET Offers finite output resistance because of
Option A:	Punch through effect
Option B:	Channel length Modulation Effect
Option C:	Body Effect
Option D:	Hot electron effect
Q2.	The MOSFET consists of following numbers of Junction capacitance
Option A:	6
Option B:	8
Option C:	10
Option D:	12
Q3.	MOSFET works as linear resistor in
Option A:	Saturation region.
Option B:	Triode region
Option C:	Deep Triode region
Option D:	Breakdown region.
Q4.	In Current Mirror circuit if 2 (W/L)o/p=(W/L)ref,then
Option A:	Io=Iref
Option B:	Iref=2Io
Option C:	Io=2Iref
Option D:	Io=3Iref
Q5.	In CS Amplifer with Passive load for MOSFET Procees Transconductance is 0.1ma/v^2,(W/L)=20,Overdrive voltage is 1V, λ=0 and RL=10K,then its voltage gain is.
Option A:	10
Option B:	20
Option C:	30
Option D:	40
Q6.	For a MOSFET VGS=2V,VTN=1V,ID=1Milliampere and λ=0.01v^-1,then its Intrinsic gain is
Option A:	200
Option B:	100
Option C:	50
Option D:	300

Q7.	In a PMOS diode connected CS Amplifier if Mobility of Electron is four times Mobility of holes,and (W/L) ratio of NMOS is Four times to that of PMOS then its voltage gain is
Option A:	4
Option B:	8
Option C:	10
Option D:	12
Q8.	In MOSFET the body terminal is used for
Option A:	To make MOSFET ON
Option B:	To make MOSFET OFF
Option C:	To avoid channel length Modulation
Option D:	To vary the Threshold voltage of MOSFET
Q9.	In case of current mirror circuit we get error in output current because of
Option A:	Punch through effect
Option B:	Channel length Modulation Effect
Option C:	Body Effect
Option D:	Hot electron effect
Q10.	For a MOSFET I_{DQ}=4MilliAmpere,V_{GS}=4volt and V_{TN}=2volt,then tranconductance of MOSFET is
Option A:	2 millimho
Option B:	4millimho
Option C:	6millimho
Option D:	8millimho
Q11.	In case of NMOS transistor the drain current flows because of___ charge carrier
Option A:	Positive
Option B:	Negative
Option C:	Both
Option D:	Neutral
Q12.	For a NMOS Diode connected load CS Amplifier for driver transistor (W/L) is 100 and for load transistor (W/L) is 4 then its voltage gain is.
Option A:	4
Option B:	5
Option C:	6
Option D:	7
Q13.	For a current mirror circuit I_O=2Milliampere and λ=0.01V^{-1}then its output Resistance is
Option A:	25KΩ
Option B:	35KΩ
Option C:	40KΩ
Option D:	50KΩ
Q14.	In mask layout diagram the minimum width of Metal1 is
Option A:	1 λ

Option B:	2 λ
Option C:	3 λ
Option D:	4 λ
Q15.	A reverse bias P-N junction behaves like a
Option A:	Variable Inductor
Option B:	Variable capacitor
Option C:	Rectifier
Option D:	Clipper.
Q16.	For a differential amplifier V1=110 μV and V2=90 μv then Vid and Vcm is
Option A:	20 μV,100 μV
Option B:	100 μV,20 μV
Option C:	20 μV,80 μV
Option D:	80 μV,20 μV
Q17.	For a dual input balance o/ p differential amplifier IDQ=1ma,Kn=1ma/ v^2 and Rd= 10 K.If λ=0 ,then Ad is
Option A:	10
Option B:	15
Option C:	20
Option D:	40
Q18.	For a given differential amplifier Ad= 100 ,Acm=10 ,Then CMRR in Decibel is
Option A:	10
Option B:	15
Option C:	30
Option D:	20
Q19.	In Class A MOS Power amplifier the transistor is
Option A:	OFF under no signal condition
Option B:	ON under no signal condition
Option C:	Cut- Off region
Option D:	Breakdown region.
Q20.	The theoretical efficiency of Class B MOS power amplifier is
Option A:	50 %
Option B:	90%
Option C:	78.5%
Option D:	100%
Q21.	In power amplifier circuit the use of RFC is
Option A:	Impedance matching
Option B:	Providing isolation between DC & AC
Option C:	Boosting of power gain
Option D:	Reducing the voltage swing.
Q22.	For a class B Power amplifier conduction angle of MOSFET IS_____ DEGREE

Option A:	0
Option B:	0 to 90
Option C:	0 to 180
Option D:	0 to 270
Q23.	In class D Power amplifier the MOS transistors operates in
Option A:	Triode region
Option B:	Acts as switch
Option C:	Saturation Region
Option D:	Breakdown region.
Q24.	To fabricate Inductor inside the IC we use
Option A:	Plastic spiral wire
Option B:	Polysilicon spiral wire
Option C:	Silicon spiral wire
Option D:	Metal spiral wire.
Q25.	For a differential amplifier with balance output and constant current source biasing having Ro=200K and gm=1millimho then its CMRR is
Option A:	401
Option B:	501
Option C:	301
Option D:	201

University of Mumbai
Examination 2020

Program: Electronics and Telecommunication Engineering
Curriculum Scheme: Rev2016
Examination: Third Year Semester VI
Course Code:ECCDLO5011 and Course Name: MICROELECTRONICS
Time: 1 hour Max. Marks: 50

==========

Question Number	Correct Option
Q1.	B
Q2.	B
Q3.	C
Q4	B
Q5	B
Q6	A
Q7	A
Q8.	D
Q9.	B
Q10.	B
Q11.	B
Q12.	B
Q13.	D
Q14.	C
Q15.	B
Q16.	A
Q17.	C
Q18.	D
Q19.	B
Q20.	C
Q21.	B
Q22.	C
Q23.	B
Q24.	D
Q25.	A

University of Mumbai
Examination 2020

Program: BE Electronics and Telecommunication Engineering
Curriculum Scheme: Revised 2016
Examination: Third Year Semester V
Course Code: ECCDLO5012 and Course Name: TV & Video Engineering
Time: 1hour Max. Marks: 50

==========

For the students:- All the Questions are compulsory and carry equal marks .

Q1.	Which of the following blocks is not present in monochrome television transmitter?
Option A:	Television camera
Option B:	Video amplifier
Option C:	Video detector
Option D:	FM modulating amplifier
Q2.	In Television system, which of the following is not complementary colour?
Option A:	Cyan
Option B:	Magenta
Option C:	Yellow
Option D:	Green
Q3.	----- is a process by using which Signals captured from the physical world are translated into digital form.
Option A:	Sampling
Option B:	Digitization
Option C:	Quantization
Option D:	Encoding
Q4.	Which of the following modulation techniques is not offered by DVB – T system?
Option A:	OPSK
Option B:	16-QAM
Option C:	BPSK
Option D:	64-QAM
Q5.	In MAC signal Luminance is compressed at--------
Option A:	10.3 µsec
Option B:	17.2 µsec
Option C:	34.4 µsec
Option D:	64 µsec
Q6.	Which of the following is not an LCD display Technology?
Option A:	Twisted Nematic
Option B:	Patterned Vertical Alignment
Option C:	Edge Lit
Option D:	In Plane Switching

Q7.	Which of the following characteristics of composite video signal is not correct?
Option A:	Line Period H=64µsec
Option B:	Front Porch= 1.5 µsec
Option C:	Line Sync Pulse=4.7µsec
Option D:	Field blanking period= 1480µsec
Q8.	The Luminance Y signal is represented as,
Option A:	Y = 0.3B + 0.59G + 0.11R
Option B:	Y = 0.3R + 0.59G + 0.11B
Option C:	Y = 0.3G + 0.59B + 0.11R
Option D:	Y = 0.3B + 0.59R + 0.11G
Q9.	A digital image is represented by a matrix of pixels which include color information is called_____.
Option A:	Matrix Array
Option B:	Image Array
Option C:	Frame Array
Option D:	Pixel Array
Q10.	DVB-H is designed to work in which of the following frequency bands?
Option A:	UHF-IV/V
Option B:	MF
Option C:	C band
Option D:	S band
Q11.	Each MAC line contains 1296 samples, out of that how many samples are used for sync and sound signal?
Option A:	697
Option B:	349
Option C:	206
Option D:	576
Q12.	ChromeCast is a dongle for your television, which is connected to which port of TV?
Option A:	USB
Option B:	HDMI
Option C:	VGA
Option D:	Audio & Video
Q13.	Which of the following statements is not applicable to IPTV?
Option A:	In IPTV set up, conventional telephone, broadband internet and IPTV services work together.
Option B:	It uses RTP over UDP delivery protocol
Option C:	Set top box is not needed for IPTV equipment.
Option D:	There are no delays or interruptions.

Q14.	Horizontal retrace in a TV receiver is also known as____.
Option A:	Ringing
Option B:	Burst
Option C:	Flyback
Option D:	Damper
Q14.	Compatibility implies that:
Option A:	The colour television signal must produce a normal black and white picture on a monochrome receiver without any modification of the receiver circuitry.
Option B:	The monochrome signal must produce a normal black and white picture on a colour receiver without any modification of the receiver circuitry.
Option C:	The monochrome signal must produce a colour picture on a colour receiver without any modification of the receiver circuitry.
Option D:	The colour television signal must produce a colour picture on a colour receiver without any modification of the receiver circuitry.
Q15.	1125/60/2:1 standard represents_____.
Option A:	1125 are the number of lines to be scanned, 60 are the number of vertical lines to be scanned, 2:1 represents progressive scanning.
Option B:	1125 are the number of lines to be scanned, 60 is vertical scanning frequency, 2:1 represents progressive scanning.
Option C:	1125 are the number of lines to be scanned, 50 is vertical scanning frequency; 2:1 represents Interlaced scanning.
Option D:	625 are number of lines to be scanned, 50 are total number of retrace lines, 2:1 represents progressive scanning
Q16.	Which of the following DVB systems sends data in physical layer pipes?
Option A:	DVB- T
Option B:	DVB- T2
Option C:	DVB - H
Option D:	DVB- S
Q17.	In MAC encoding, compression factor for chrominance is ____.
Option A:	1.5
Option B:	4
Option C:	5
Option D:	3
Q18.	The colour of emitted light from LED depends on_____.
Option A:	Construction of LED, that is physical dimensions
Option B:	Number of available carriers
Option C:	Type of semiconductor material used
Option D:	Number of recombination's taking place
Q19.	At which level of Composite Video Signal, sync pulses are added?
Option A:	75%
Option B:	45 %

Option C:	12.5%
Option D:	50%
Q20.	In subtractive mixing theory, Yellow colour will be obtained by___.
Option A:	White – Blue
Option B:	White – Green
Option C:	White – Red
Option D:	White – Green – Red
Q21.	Which of the following is not the Chroma subsampling standard?
Option A:	4:4:4
Option B:	4:3:2
Option C:	4:2:2
Option D:	4:1:1
Q22.	In TV broadcast via satellite, the TV signal from the main broadcast station is routed to the earth station via
Option A:	Low power transmitters
Option B:	Microwave links
Option C:	TV relay stations
Option D:	Microwave repeater stations
Q23.	Which of the following statement is not true about the MAC signal?
Option A:	MAC signal has better performance than composite signal system.
Option B:	The bandwidth is reduced 50 percent due to compression.
Option C:	G-MAC is one of the versions of MAC system.
Option D:	MAC can provide multiple sound channels.
Q24.	In a TV receiver set, sound and video signals are separated at the___.
Option A:	Video amplifier
Option B:	Video detector
Option C:	Sync separator
Option D:	IF stage
Q25.	Which of the following is not a characteristic of NTSC television system?
Option A:	It has I & Q chrominance signals.
Option B:	Colour subcarrier frequency is 3.58MHz.
Option C:	Channel bandwidth is 6MHz.
Option D:	It is free from differential phase error.

University of Mumbai
Examination 2020

Program: BE Electronics and Telecommunication Engineering
Curriculum Scheme: Revised 2016
Examination: Third Year Semester V
Course Code: ECCDLO5012 and Course Name: TV & Video Engineering
Time: 1hour Max. Marks: 50

==========

Question	Correct Option
Q1.	C
Q2.	D
Q3.	B
Q4	C
Q5	C
Q6	C
Q7	D
Q8.	B
Q9.	D
Q10.	A
Q11.	C
Q12.	B
Q13.	C
Q14.	C
Q15.	C
Q16.	B
Q17.	D
Q18.	C
Q19.	A
Q20.	A
Q21.	B

Q22.	D
Q23.	C
Q24.	B
Q25.	D

University of Mumbai
Examination 2020

Program: Electronics and Telecommunication Engineering
Curriculum Scheme: Rev 2016
Examination: Third Year Semester V
Course Code: ECCDLO 5013 and Course Name: Elective I: Finite Automata Theory
Time: 1 hour Max. Marks: 50

==========

For the students:- All the Questions are compulsory and carry equal marks .

Q1.	In a tabular method, the minimal expression of a function contain_____
Option A:	few prime implicants and all essential prime implicants
Option B:	all prime implicants and all essential prime implicants
Option C:	all prime implicants and few essential prime implicants
Option D:	only essential prime implicants
Q2.	A switching function F can be decomposed into two threshold element F_1 and F_2. The function F can be implemented using_____
Option A:	2 threshold elements interconnected to perform AND operation
Option B:	2 threshold elements interconnected to perform NAND operation
Option C:	2 threshold elements interconnected to perform OR operation
Option D:	2 threshold elements interconnected to perform NOR operation
Q3.	Consider the circuit shown below. The expression for the next state Q(n+1) is 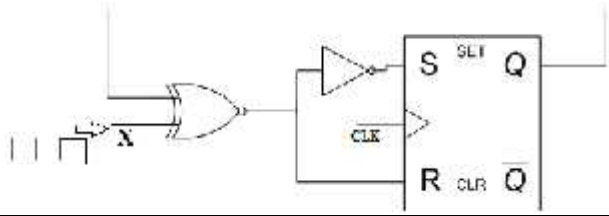
Option A:	$X\overline{Q}$
Option B:	$X \oplus Q$
Option C:	$X \cup Q$
Option D:	XQ
Q4.	To count from 0 to 1024 the number of required flip-flop is
Option A:	10
Option B:	13
Option C:	12
Option D:	11
Q5.	How many flip-flops will be complemented in a 10-bit binary ripple counter to reach the next count after the count 1001100111
Option A:	4
Option B:	5
Option C:	6
Option D:	9

Q6.	A unate function may be
Option A:	Positive in some of its variable
Option B:	negative in some of its variable
Option C:	Positive or negative in all of its variable
Option D:	Positive for all variables
Q7.	A Mealy system produces a 1 output if the input has been 0 for at least two consecutive clocks followed immediately by two or more consecutive 1's, The minimum state for this system is
Option A:	4
Option B:	5
Option C:	8
Option D:	3
Q8.	The race in which stable state depends on order is called
Option A:	Critical race
Option B:	Identical race
Option C:	Non critical race
Option D:	Defined race
Q9.	A Condition occurs when an asynchronous sequential circuit changes two or more binary states variables
Option A:	deadlock condition
Option B:	Running condition
Option C:	Race condition
Option D:	No condition
Q10.	The function $f_1(a,b,c,d)=S_{0,2,4}(a,b,c,d)$ and $f_2(a,b,c,d)=S_{3,4}(a,b,c,d)$ then Find $f_3=f_1+f_2$ =_____
Option A:	$S_{0,1,2,3,4}(a,b,c,d)$
Option B:	$S_{0,2,4}(a,b,c,d)$
Option C:	$S_4(a,b,c,d)$
Option D:	$S_{0,2,3,4}(a,b,c,d)$
Q11.	The table having one state in each row is called
Option A:	Transition table
Option B:	State table
Option C:	Flow table
Option D:	Primitive flow table
Q12.	The circuits removing series of pulses is called
Option A:	Defined circuit
Option B:	Bounce circuit
Option C:	DE-bounce circuit
Option D:	Undefined circuit
Q13.	Which one of the following in not the element of ASM chart?

Option A:	State box
Option B:	Decision box
Option C:	Data box
Option D:	Conditional box
Q14.	Conditional box has a shape of
Option A:	Square
Option B:	Rectangle
Option C:	Oval
Option D:	Pentagon
Q15.	The necessary and sufficient condition to detect a stuck-at fault in a circuit is:
Option A:	The fault-free and faulty logic values at the site of the fault must be different.
Option B:	The fault-free and faulty logic values at the primary output(s) must be different.
Option C:	Non-controlling values are applied to all side inputs of gates that lie on the path from the fault site to the primary output(s).
Option D:	The fault-free and faulty logic values at the site of the fault must be same.
Q16.	f(x, y, z) = xy'+yz'+xyz, what are essential prime implicants of this switching function?
Option A:	8
Option B:	0
Option C:	4
Option D:	3
Q17.	How many number of prime implicants are there in the expression F(x, y, z) = y'z' + xy + x'z.
Option A:	7
Option B:	19
Option C:	3
Option D:	53
Q18.	In the incompletely specified machines, _____is a state reducing tool used to reduce states.
Option A:	ASM
Option B:	Merger graph
Option C:	k-map
Option D:	Tabular method
Q19.	In merger graph method, if two states are incompatibles then _____ between the states.
Option A:	No connecting line is required
Option B:	Connecting line is required
Option C:	Unbroken line is required
Option D:	Broken line is required
Q20.	In digital circuits permanent faults may arises due to
Option A:	Noise

Option B:	Non ideal transient behaviour of components
Option C:	Failure of component
Option D:	Propagation time
Q21.	In digital circuits, single stuck-at faults may arises due to
Option A:	Wrong input
Option B:	Damage of component
Option C:	unbroken of wires
Option D:	Shorting of wire to ground
Q22.	In mealy machine, the O/P depends upon?
Option A:	State
Option B:	Previous state
Option C:	State and Input
Option D:	Only input
Q23.	A threshold function
Option A:	May be a unate function
Option B:	is not a unate function
Option C:	Is always a unate function
Option D:	may or may not be unate function
Q24.	For a 8 state machine if P_4 = (A) (B) (CD) (EFG) (H) then its P_3 partition may be _____
Option A:	(CD) (A) (B) (EFG) (H)
Option B:	(AB) (CD) (EF) (GH)
Option C:	(AB) (CD) (EH) (FG)
Option D:	(ABC) (DEF) (GH)
Q25.	Branching method is used to obtain minimal expression, if the prime implicant chart has _____
Option A:	no prime implicants
Option B:	dominated rows
Option C:	dominated columns
Option D:	no essential prime implicants

University of Mumbai
Examination 2020

Program: Electronics and Telecommunication Engineering
Curriculum Scheme: Rev2016
Examination: Third Year Semester V
Course Code: ECCDLO 5013 and Course Name: Elective I: Finite Automata Theory
Time: 1 hour Max. Marks: 50

==========

Question Number	Correct Option
Q1.	A
Q2.	C
Q3.	B
Q4	D
Q5	A
Q6	C
Q7	A
Q8.	A
Q9.	C
Q10.	D
Q11.	D
Q12.	C
Q13.	C
Q14.	C
Q15.	B
Q16.	B
Q17.	C
Q18.	B
Q19.	A
Q20.	C
Q21.	D
Q22.	C
Q23.	C
Q24.	A
Q25.	D

University of Mumbai

Examination 2020 under cluster APSIT

Program: Electronics & Telecommunication Engineering

Curriculum Scheme: Rev2016

Examination: Third Year Semester V

Course Code: ECCDLO 5014 and Course Name: Data Compression & Encryption

Time: 1 hour Max. Marks: 50

==========

For the students:- All the Questions are compulsory and carry equal marks .

Q1.	AES has_____ different configurations
Option A:	Two
Option B:	Three
Option C:	Four
Option D:	Five
Q2.	In Asymmetric-Key Cryptography, although RSA can be used to encrypt and decrypt actual messages, it is very slow if the message is
Option A:	Short
Option B:	Long
Option C:	Flat
Option D:	Thin
Q3.	SHA-1 produces a hash value of
Option A:	256 bits
Option B:	160 bits
Option C:	180 bits
Option D:	128 bits
Q4.	If the frames are displayed on the screen fast enough, we get an impression of
Option A:	Signals
Option B:	Motions
Option C:	Packets
Option D:	Bits
Q5.	In Audio and Video Compression, each frame is divided into small grids, called picture elements or
Option A:	Frame
Option B:	Packets
Option C:	Pixels
Option D:	Mega Pixels
Q6.	Moving Picture Experts Group (MPEG-2), was designed for high-quality DVD with a data rate of
Option A:	3 to 6 Mbps
Option B:	4 to 6 Mbps
Option C:	5 to 6 Mbps
Option D:	6 to 7 Mbps
Q7.	Steps in jpeg are in following order

Option A:	DCT, quantization , data compression
Option B:	DCT, data compression, quantization
Option C:	Quantization, DCT, data compression
Option D:	Data compression ,DCT, quantization
Q8.	What is pixel?
Option A:	Pixel is the element of a digital image
Option B:	Pixel is the element of an analog image
Option C:	Pixel is the cluster of a digital image
Option D:	Pixel is the cluster of an analog image
Q9.	Which of the following redundancies are present in audio compression
Option A:	Only contextual
Option B:	Alphanumeric and contextual
Option C:	Alphabetical and contextual
Option D:	Temporal redundancy and spatial redundancy
Q10.	SET stands for
Option A:	Secure email transaction
Option B:	Secure electronic transaction
Option C:	Safe email transaction
Option D:	Secure electronic transmission
Q11.	Suppose storing an image made up of a square array of 256×256 pixels requires 65,536 bytes. The image is compressed and the compressed version requires 16,384 bytes. Then compression ratio is _____.
Option A:	1:4
Option B:	4:1
Option C:	1:2
Option D:	2:1
Q12.	Which of the following is true of lossy and lossless compression techniques?
Option A:	Lossless compression is only used in situations where lossy compression techniques can't be used
Option B:	Lossy compression is best suited for situations where some loss of detail is tolerable, especially if it will not be detectable by a human
Option C:	Both lossy and lossless compression techniques will result in some information being lost from the original file
Option D:	Neither lossy nor lossless compression can actually reduce the number of bits needed to represent a file
Q13.	Which of the following would not be suitable for Lossy Compression?
Option A:	Speech
Option B:	Video
Option C:	Text
Option D:	Image

Q14.	_____ is one of the best known Dictionary-based encoding algorithms.
Option A:	LZ77
Option B:	LZ87
Option C:	LZ67
Option D:	LZ97
Q15.	If we use Run Length Encoding aaaaccbbbdddd is
Option A:	1100110000
Option B:	a4c2b3d4
Option C:	10000010000
Option D:	4a2c3b4d
Q16.	An alphabet consist of the letters A, B, C and D. The probability of occurrence is P(A) = 0.4, P(B) = 0.1, P(C) = 0.2 and P(D) = 0.3. The Huffman code is
Option A:	A = 0, B = 111, C = 110, D = 10
Option B:	A = 0, B = 111, C = 11, D = 101
Option C:	A = 01, B = 111, C = 110, D = 10
Option D:	A = 0, B = 11, C = 10, D = 111
Q17.	In RSA, Φ(n) = _____ in terms of p and q.
Option A:	(p)/(q)
Option B:	(p)(q)
Option C:	(p-1)(q-1)
Option D:	(p+1)(q+1)
Q18.	Choosing a discrete value that is near but not exactly at the analog signal level leads to
Option A:	PCM error
Option B:	Quantization error
Option C:	PAM error
Option D:	Sampling error
Q19.	S/MIME is abbreviated as _____
Option A:	Secure/Multimedia Internet Mailing Extensions
Option B:	Secure/Multipurpose Internet Mailing Extensions
Option C:	Secure/Multimedia Internet Mail Extensions
Option D:	Secure/Multipurpose Internet Mail Extensions
Q20.	What are the different ways to classify an IDS?
Option A:	Zone based
Option B:	Host & Network based
Option C:	Network & Zone based
Option D:	Level based
Q21.	In public key cryptosystem _____ keys are used for encryption and decryption.
Option A:	Same
Option B:	Different
Option C:	Encryption Keys

Option D:	Decryption Keys
Q22.	DES uses a key generator to generate sixteen _____ round keys
Option A:	32-bit
Option B:	48-bit
Option C:	54-bit
Option D:	42-bit
Q23.	_____ is the original message before transmission
Option A:	Ciphertext
Option B:	Secret-text
Option C:	Plain text
Option D:	Public text
Q24.	The DES Algorithm Cipher System consists of _____rounds (iterations) each with a round key
Option A:	12
Option B:	18
Option C:	9
Option D:	16
Q25.	What is the key size allowed in PGP?
Option A:	1024-1056
Option B:	1024-4056
Option C:	1024-4096
Option D:	1024-2048

University of Mumbai

Examination 2020 under cluster APSIT

Program: Electronics & Telecommunication Engineering

Curriculum Scheme: Rev2016

Examination: Third Year Semester V

Course Code: ECCDLO 5014 and Course Name: Data Compression & Encryption

Time: 1 hour Max. Marks: 50

==========

Question Number	Correct Option
Q1.	B
Q2.	A
Q3.	B
Q4	B
Q5	C
Q6	A
Q7	A
Q8.	A
Q9.	D
Q10.	B
Q11.	B
Q12.	B
Q13.	C
Q14.	A
Q15.	D
Q16.	A
Q17.	C
Q18.	B
Q19.	A
Q20.	D
Q21.	B
Q22.	B
Q23.	C
Q24.	D
Q25.	C

Department : Electronics & Telecommunication

Syllabus: CBCGS

Semester: V

Subject Name: Data Compression & Encryption

Subject Code: ECCDLO5014

Date of Exam: 11-12-20

The revised question is as below

Q19.	S/MIME is abbreviated as _____
Option A:	Secure/Multimedia Internet Mailing Extensions
Option B:	Secure/Multipurpose Internet Mailing Extensions
Option C:	Secure/Multimedia Internet Mail Extensions
Option D:	Secure/Multipurpose Internet Mail Extensions

Ans: The correct option is d